Proceedings of the ASME 2020
Dynamic Systems and Control Conference
DSCC2020
October 5-7, 2020, Virtual, Online

DSCC2020-3155

ON THE NONLINEAR VIBRATION ANALYSIS OF A HAND-HELD IMPACT MACHINE

Oreoluwa Alabi
Department of Mechanical Engineering
Virginia Polytechnic Institute and State University
Blacksburg, Virginia 24061

Oumar Barry *
Department of Mechanical Engineering
Virginia Polytechnic Institute and State University
Blacksburg, Virginia 24061
Email: obarry@vt.edu

ABSTRACT

Prolonged exposure of the human arm to vibrations from hand-held impact (HIM) tools can be hazardous as such, it is important that the level of vibration suppression in HIMs is improved. This paper sought to address this issue by studying a model of the hand-arm system (HAS) coupled to a HIM which is also coupled to a nonlinear tuned vibration absorber inerter (NVAI). The HAS is modelled as a 2-DOF system coupled to the HIM at a single point. The HIM is modelled as an oscillator with linear damping, and both linear and nonlinear stiffnesses. The nonlinear stiffness of the HIM is introduced to represent the nonlinearities introduced by the vibro-impact dynamics of the HIM. After obtaining the equations of motion for the system, an analytical solution is obtained using the harmonic balance method. The analytical solution is validated using direct numerical integration and the results show very good agreement. The performance of the NVAI is compared to those of the classical nonlinear and linear vibration absorbers. Parametric study is carried out to examine the role of key design parameters, such as the damping of the absorber, nonlinear stiffness of the HIM and inertance of the NVAI, on the performance of the NVAI.

INTRODUCTION

Hand-held impact tools are ubiquitous in industrial sectors such as mining, airplane manufacturing and construction [1–4]. A major problem with HIM's is that workers who use these tools may be exposed to hand transmitted vibrations (HTV). Severe exposure to hand-arm vibrations puts these workers at risk of developing hand-arm vibration syndrome(HAVS). It has been shown that approximately 20% of workers who are exposed to HTV through tools such as impact screwdrivers and chipping hammers are at risk of developing finger blanching, [5] a symptom of HAVS.

Hand-arm vibration syndrome (HAVS) is a disorder characterized by vascular, musculoskeletal and neurological disorders [6–9]. One of the major symptoms of HAVS is vibration white finger (VWF) which in extreme cases can lead to disability [10–13]. As a result, two main methods have been proposed to attenuate hand transmitted vibrations from HIM's. These methods are vibration isolation and dynamic absorption [14]. The incorporation of vibrational isolators to mitigate vibrations at the tool handle has been investigated in [15, 16]. In these studies, the isolator was devised as a material placed between the tool handle and hands of an operator. The problem with such isolators is that large masses are required at the handle for the isolator to be effective [17]. Also, there is a trade-off between the controllability of the tool and vibration isolation effectiveness when making use of such isolators [18]. Isolators in the form of anti-vibration gloves have also been explored as a means of attenuating vibrations from a tool's handle. However, studies have shown that these gloves are effective in high-frequency ranges ($> 150Hz$) and ineffective in low-frequency ranges [19, 20].

*Address all correspondence to this author.

The second method for mitigating unwanted vibrations from HIMs is the use of vibration absorbers. Linear absorbers have been used in [18]. However, a common problem with using linear tuned vibrational absorbers is that slight variations from the frequency from which these absorbers have been tuned can lead to amplification rather than suppression of vibrations. As a result, nonlinear tuned vibration absorbers (NVA) have been studied to increase the operating frequency range of vibrational absorbers. Wang et al. [21] used a NVA to reduce machine chatter suppression and obtained a 30 percent improvement in machine performance when compared to a TVA. With regards to the implementation of a NVA in a HIM, Lindell et al. [22] showed that an NVA in a pneumatic impact machine could suppress vibrations in a broader range of frequency than the TVA.

To further improve vibration attenuation mechanisms, more emphasis should be put on nonlinear vibration attenuation mechanisms due to the improvement they offer over linear vibration attenuation mechanisms. The (nonlinear)vibro-impact dynamics of a HIM makes it vital that vibration attenuation from HIMs be done with nonlinear mechanisms [23]. Habib et al. have shown that vibration attenuation mechanisms are more effective when they have the same functional form of the system on which they are acting on [24]. The addition of inerters to nonlinear absorbers is also a topic that should be explored as inerters improve the performance of vibration absorbers by increasing the effective mass of the absorbers while having small physical masses. This is true because a larger absorber mass improves the vibration suppression characteristics of an absorber. The effective mass boosting effects realized with a small physical mass, characteristic of an inerter, has been realized through a 2kg inerter that produces an effective mass of 300kg [25]. Various case studies have shown the effectiveness of inerters coupled with linear absorbers to reduce vibrations in cars and civil engineering structures [26–30].

As a result of these findings, the present paper presents, for the first time, the study of a HIM with a nonlinear vibrational absorber and an inerter (NVAI). The addition of an inerter to the dynamic absorber is expected to improve the vibration mitigation properties of the absorber. While the addition of a nonlinear absorber will result in a wider bandwidth vibration suppression in these HIMs. To realize this goal, this paper will study a nonlinear oscillator equipped with a NVAI. The oscillator is assumed to be the mass of the vibrating HIM. The main mass of the HIM is coupled to the HAS so the level of vibration attenuation to the HIM is assessed by considering the level of vibration mitigation at the HAS. We then use the harmonic balance and continuation method to obtain plots that will highlight the effectiveness of the different absorbers.

MATHEMATICAL MODELLING

In this paper the vibration response of the HAS connected to a HIM is analyzed while the HIM is equipped with a nonlinear tuned vibrational absorber-inerter(NVAI). The model of the HAS used in this study is adapted from the paper by Dong et al. [31], in which the HAS is coupled at a single point to the HIM. This model was used in this study because it can provide a reasonable response of the HAS for frequencies less than 100Hz. The HIM evaluated in this paper operates in a frequency range of 30Hz to 60Hz, hence the HAS model used is appropriate for our study. The schematic of the HAS and HIM coupled with a NVAI is shown in Fig. 1. m_H, m_s, m_a and m_n represent the mass of the HIM, tissue and skin covering the HAS, hand-arm and absorber respectively. k_H, k_{HL} and c_H represent the nonlinear and linear ground connection stiffness, and the damping coefficient of the HIM respectively. b represents the effective mass provided by an inerter which is grounded on one side and coupled to the mass of the absorber on the other side. In this study, the effective mass provided by the inerter is taken to be two times its mass.

For this analytical model, F_w represents the excitation force of the HIM due to the reciprocating motion of the piston which causes it to function. The analytical form of this excitation was adapted from the the expression obtained experimentally in [17] and is shown below:

$$F_w = F_{ref}\left(\frac{\omega}{\omega_{ref}}\right)^2 Sin\left(\omega t\right) \tag{1}$$

In this expression, ω represents the excitation frequency of the excitation force while ω_{ref} represents a reference frequency needed to describe the analytical form of the excitation force. The HIM system with a NVAI has three degrees of freedom represented as the motion of the HIM x_H, HAS x_a and the absorber x_N. The governing equations of motion are obtained using Newton's second law to give:

$$\begin{aligned}&(m_H+m_s)\ddot{x}_H - \dot{x}_a c_s - x_a k_s + \dot{x}_H\left(c_H+c_N+c_s\right)\\&-c_N\dot{x}_N + x_H\left(k_{\mathrm{HL}}+k_{\mathrm{NL}}+k_s\right)+k_N\left(x_H-x_N\right)^3\\&+k_H x_H^3 - k_{\mathrm{NL}}x_N = \frac{\omega^2 F_{\mathrm{ref}} sin(\omega t)}{\omega_{\mathrm{ref}}^2},\end{aligned} \tag{2a}$$

$$\begin{aligned}&m_a\ddot{x}_a + \dot{x}_a\left(c_a+c_s\right)+x_a\left(k_a+k_s\right)+c_s\left(-\dot{x}_H\right)\\&-x_H k_s = 0,\end{aligned} \tag{2b}$$

$$\begin{aligned}&(m_N+\mathrm{b})\ddot{x}_N - c_N\dot{x}_H + c_N\dot{x}_N + k_N\left(x_N-x_H\right)^3\\&-x_H k_{\mathrm{NL}} + k_{\mathrm{NL}}x_N = 0.\end{aligned} \tag{2c}$$

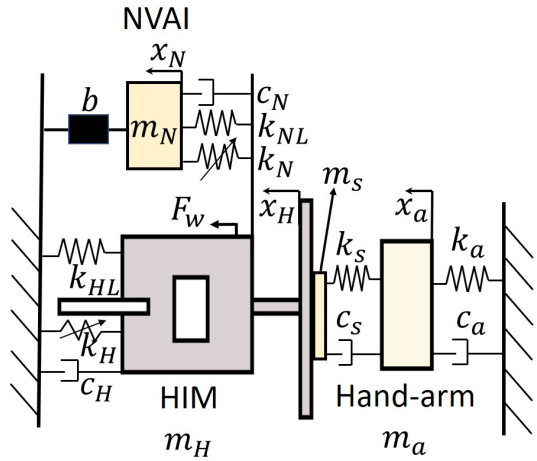

Figure 1: Schematic of the HIM and HAS system with a NVAI

These equations are then written in a compact form to obtain

$$[\mathbf{M}]\{\ddot{\mathbf{x}}\}+[\mathbf{C}]\{\dot{\mathbf{x}}\}+[\mathbf{K}]\{\mathbf{x}\}+[\mathbf{N}]=\{\mathbf{F_{eq}}\} \tag{3}$$

where $\{\mathbf{x}\}=[x_H, x_a, x_N]'$. $[\mathbf{M}]$, $[\mathbf{C}]$, and $[\mathbf{K}]$ are (3×3) inertia, damping and stiffness matrices respectively, $[\mathbf{N}]$ is a (3×1) vector containing the nonlinear terms in our equations and $\{\mathbf{F_{eq}}\}$ is a (3×1) force vector. These matrices are presented in Appendix A.

ANALYTICAL SOLUTION

The method of harmonic balance is used to formulate a set of equations from which we can obtain explicit expressions for the displacement amplitude of the systems. This is done so that the nonlinear amplitude-frequency response of the HIM can be plotted using the arc-length continuation method as numerical simulations cannot capture all of the points on a nonlinear amplitude-frequency response plot. Via the method of harmonic balance, the solution of the system with a NVAI is synonymous with the external excitation acting on the system. Therefore the solutions of Eqs. (2) are assumed to be of the form:

$$\{\mathbf{x}\}(t)=\{\mathbf{A}\}\cos(\omega t)+\{\mathbf{B}\}\sin(\omega t) \tag{4}$$

where $\{\mathbf{A}\}$ and $\{\mathbf{B}\}$ are (3×1) columns vectors with unknown coefficients a_1, c_1, e_1 and b_1, d_1, f_1 respectively. After substituting the expression above for $x_H(t)$, $x_N(t)$ and $x_a(t)$ into Eqs. (2), we obtain,

$$\begin{aligned}&-\omega^2[\mathbf{M}]\{\mathbf{A}\}\cos(\omega t)-\omega^2[\mathbf{M}]\{\mathbf{B}\}\sin(\omega t)\\&-\omega[\mathbf{C}]\{\mathbf{A}\}\sin(\omega t)+\omega[\mathbf{C}]\{\mathbf{B}\}\cos(\omega t)+[\mathbf{K}]\{\mathbf{A}\}\cos(\omega t)\\&+[\mathbf{K}]\{\mathbf{B}\}\sin(\omega t)+[\mathbf{N_1}]=\{\mathbf{F_{eq}}\},\end{aligned} \tag{5}$$

where $[\mathbf{N_1}]$ is a (3×1) column vector defined in Appendix A. From Eqs. (2), we obtain 6 sets of equations by equating the coefficients of sine and cosine from these expressions to zero. The variables a_1, b_1, c_1, d_1, e_1 *and* f_1 can then be calculated from these equations.

RESULTS AND DISCUSSION

In this section, the analytical solution for the HIM and HAS system with a NVAI is obtained and verified via a numerical method, and the performance of the NVAI is evaluated and compared to the performance of the classical TVA and NVA. Parametric studies are also carried out to understand the effects of viscous damping and inertance of the NVAI, and HIM nonlinear stiffness on the performance of the NVAI.

The numerical properties of the NVAI used for validating the NVAI's analytical solution are presented in Table 1. The value for the mass of the HIM is chosen to represent the mass of a typical pneumatic chipping hammer, while the other properties of the HIM are chosen arbitrarily. The other systems being studied also use the same parameters listed in Table 1 except the parameter m_N which is set to $0.05m_H$ for the NVA and TVA. It should be noted that for a model of the HIM-HAS system with a NVA, b will be set to zero while for a TVA both b and k_N will be set to zero. The linear parameters of the absorbers are determined using the second order approximations obtained when the properties

of a dynamic absorber, with linear stiffness and damping, attached to a linear oscillator are optimized by the H_∞ optimization method as done in [32]. The nonlinear stiffness of the NVA and NVAI are determined using the proposed principal of similarity by [33], wherein the mathematical form of the NVA's restoring force is a mirror image of the restoring force of the primary system.

As mentioned above, the first part of our analysis involves the validation of our system's analytical solutions by comparing the solutions of our system obtained via the harmonic balance method with the solution of our system obtained using the numerical ode solver, ode45, in Matlab. At $\omega = 10, 360, 510, and\, 700$, we obtain a mean percentage difference between our analytical and numerical solution of $0.26\%, 0.71\%, 1\%, and\, 0.27\%$ respectively. We consider these errors to be negligible and determine that there is a good agreement between the solutions obtained using the numerical method and the harmonic balance method. Therefore, further analysis of the response of all systems presented in this study will be done using the harmonic balance method and arc-length continuation method.

In the remaining part of this section we compare the effectiveness of the absorbers in attenuating vibrations at different forcing amplitudes. The amplitude-frequency plots of the HIM with and without the three different absorbers at an excitation forcing amplitude of $300\,N$ and $500\,N$ are shown in Fig. 3.

For F_{ref} of our excitation forcing amplitude set to $300\,N$, all the absorbers are able to effectively mitigate vibrations produced by the HIM. This is highlighted by the difference in displacement of the HAS with and without an absorber for different frequencies in Fig. 3a. Fig. 3a also shows that the NVA and NVAI are more effective at attenuating vibrations than the TVA. When the excitation force is increased by setting F_{ref} to 500N, the nonlinear characteristic of the HIM appears as the hardening trait of the cubic spring becomes more apparent (Fig. 3b). It can also be seen that the TVA becomes detuned. With detuning observed when one of the TVA's frequency peaks begins to obtain a shape similar to the peak of the displacement of the HAS without an absorber. Similar observations have been seen in [24]. This happens because the TVA does not contain a spring which has the same nonlinear form as the nonlinear spring of the vibrating HIM.

Based on these observations, we can narrow down our options of the most effective absorbers to the NVA and NVAI which do not get detuned for strongly nonlinear motions of the HIM, which become apparent with an increase in forcing amplitude. The advantage which the NVAI holds over the NVA is a potential reduction in weight of the vibration attenuation mechanism. A well known theory in the design of absorbers is that an increase in the mass of an absorber makes for a more effective absorber. As mentioned before, the NVAI employed in this study has a total mass of $0.068kg$ where its inerter's effective mass is two times the inerters original mass. This assumption seems fair given that an inerter can provide an inertance about 3 times its mass [34]. Given this fact, we can conclude that the NVAI is a better option for attenuating vibrations as it possesses a mass less than the mass of the NVA($0.085kg$) while also suppressing vibrations better as seen in Fig 3b.

Next, we analyze the changes in the response of the HAS while the damping of our ideal absorber, the NVAI, is varied. Our results, shown in Fig. 4a, indicate that as the damping of the absorber is increased, the maximum peak of the response of the HAS initially decreases then increases. We also observe that the absorber has smaller magnitudes of minimal displacement of the HAS for smaller values of damping. This can be seen in the region between 400 rad/s and 500 rad/s of Fig. 4a. This pattern observed is similar to changes in the frequency response of a damped linear oscillator for varying damping parameters of an attached absorber. For the smallest value of c_N employed, the frequency response breaks away from what looks like a fixed point at 508 rad/s.

Further, the effect of changing the non-linear ground connection stiffness k_H on the frequency response of the HAS is studied. Fig. 4b, shows that an increase in k_H leads the system to operate in its nonlinear regime as shown through the appearance of the hardening resonance curve for the largest value of k_H. It is worth noting that the peaks of the frequency response curves vary slightly as the HIM moves from operating in a linear to nonlinear region.

The effect of changing the inertance of the NVAI is also studied. An increase in the inertance of the NVAI which corresponds to an increase in the mass of the absorber albeit without a substantial increase in the weight of the absorber leads to an increase in the effectiveness of the absorber. Fig. 5 shows that an increase in the inertance of the NVAI, reduces the resonance peaks of the frequency response curves and makes the absorber more effective.

CONCLUSION

Based on the results obtained from the study of the HIM-HAS system with different absorbers, we made the following observations. The NVAI and NVA were better at suppressing vibrations of our system than the TVA. This was because for higher forcing amplitudes, when the frequency response curve of the HAS begins to show a hardening resonance, the TVA becomes detuned while the NVA and NVAI are still able to effectively supress vibrations. This indicates that the NVAI and NVA are effective options for maintaing a wide suppression band for a system

Table 1: Parameters of the HIM system equipped with a NVAI.

Parameter	Value	Units	Parameter	Value	Units	Parameter	Value	Units
m_H	1.7	kg	k_{HL}	$3(10^5)$	N/m	c_H	50	Ns/m
m_a	1.5546	kg	k_a	4279	N/m	c_a	76.1	Ns/m
m_s	0.0493	kg	k_s	62804	N/m	c_s	192.9	Ns/m
m_N	$0.02m_H$	kg	k_{NL}	13280	N/m	c_N	9.3	Ns/m
F_{ref}	300	N	ω_{ref}	26.1	Hz	b	$0.04m_H$	kg
k_H	$3(10^8)$	Ns/m^3	k_N	$2.5(10^6)$	Ns/m^3	–	–	–

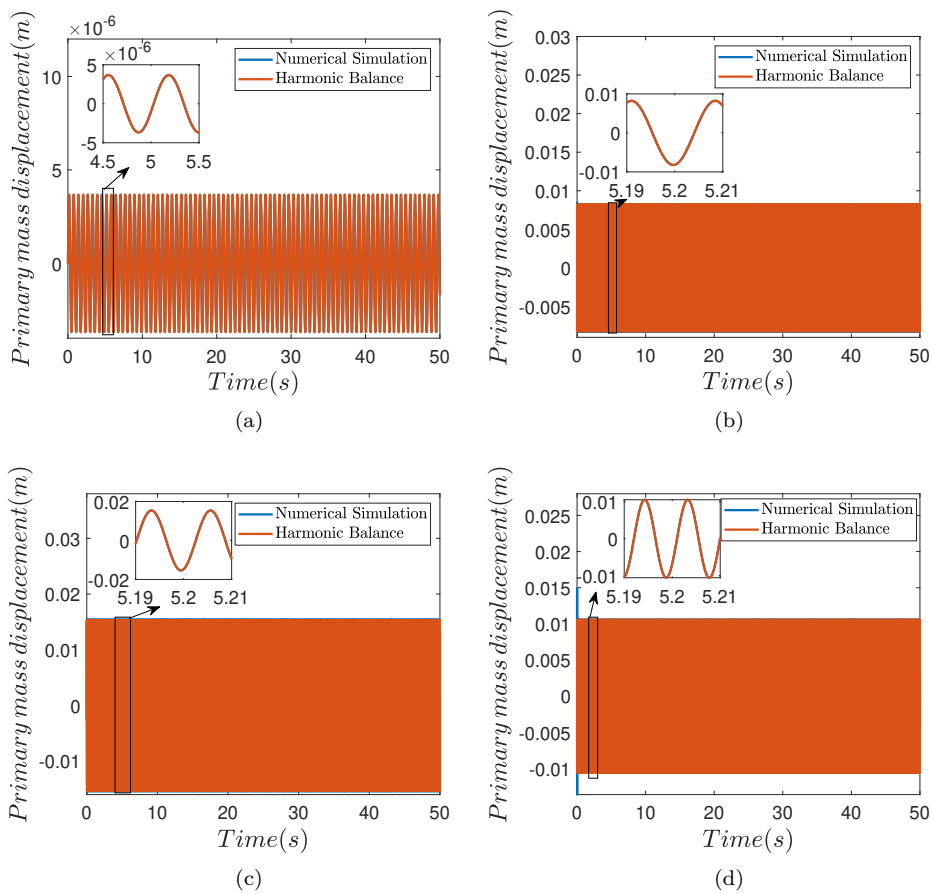

Figure 2: Comparison of numerical and analytical solutions for the responses of the HIM (primary mass) at (a) 10 rad/s, (b) 360 rad/s, (c) 510 rad/s and (d) 700 rad/s.

with nonlinearities.

We also observed that the NVAI performed better than the NVA because the NVAI suppresses vibrations better than the NVA while having a smaller mass. The NVAI was able to achieve this feat as it could provide a large effective mass by virtue of its inerter which can simulate an effective mass more than twice its mass. Given that the effectiveness of absorbers is limited by the mass which they can possess, it is vital that an absorber such as the NVAI, which provides an effective mass larger than its mass, is adopted. We

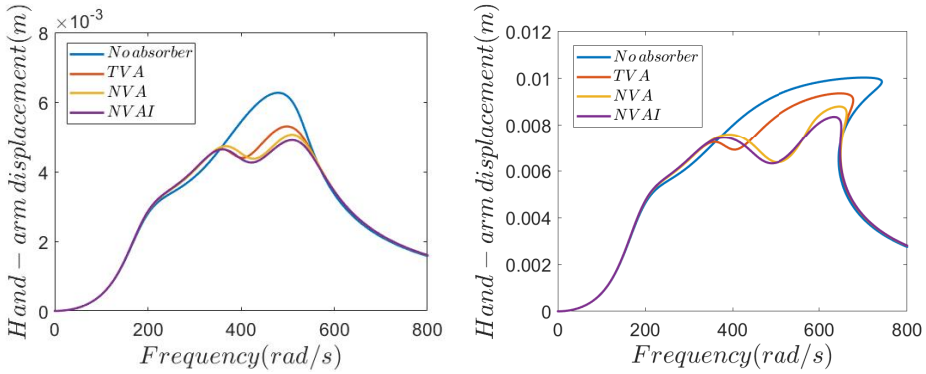

(a) (b)

Figure 3: Frequency response of HAS for excitation forcing amplitude of (a) $300N$ and (b)$500N$

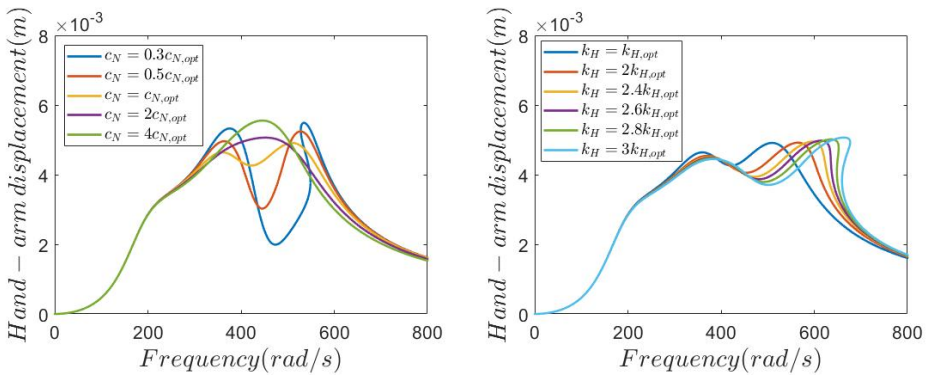

(a) (b)

Figure 4: Frequency response of HAS for a) varying absorber damping parameters and b) varying HIM non-linear stiffness parameters.

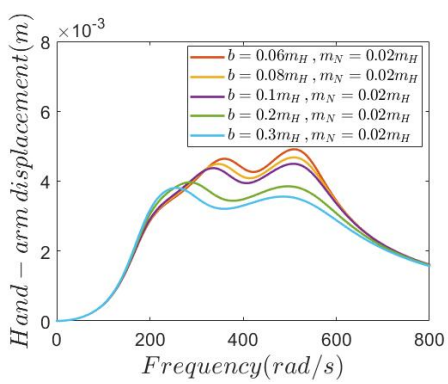

Figure 5: Frequency response of HAS for varying inerter values.

showed that increasing the mass of an absorber, by increasing the inertance of the NVAI, does indeed increase the vibration suppression characteristics of the absorber(NVAI). This result supports the claim that an increase in the effective mass of an absorber is an ideal way to improve its performance.

Finally we varied the nonlinear stiffness of the HIM and the damping of the absorber. We discovered that increasing the nonlinear stiffness of the HIM made the systems frequency response curve more likely to exhibit a nonlinear hardening resonance. We also discovered that as the damping of the absorber was increased, the maximum peak of

the response of the HAS initially decreased then increased. We also observed that the absorber had smaller magnitudes of minimal displacement of the HAS for smaller values of damping, as seen in the region between 400 rad/s and 500 rad/s.

To design a better NVAI for the HIM, it is recommended that the nonlinearity apparent in a HIM during its operation be studied. This is so that the absorber can be modelled to possess the nonlinear features apparent in the system and hence be effective. The absorber in our work was effective at mitigating vibrations because it possessed the same assumed cubic nonlinearities as the HIM system.

Appendix A: Expressions used in Eqs. (3) and (3)

$$[\mathbf{M}] = \begin{bmatrix} m_H + m_s & 0 & 0 \\ 0 & m_a & 0 \\ 0 & 0 & b + m_N \end{bmatrix}$$

$$[\mathbf{C}] = \begin{bmatrix} c_H + c_N + c_s & -c_s & -c_N \\ -c_s & c_a + c_s & 0 \\ -c_N & 0 & c_N \end{bmatrix}$$

$$[\mathbf{K}] = \begin{bmatrix} k_H L + k_N L + k_s & -k_s & -k_N L \\ -k_s & k_a + k_s & 0 \\ -k_N & 0 & k_N \end{bmatrix}$$

$$[\mathbf{N}] = \begin{bmatrix} k_H x_H^3 + k_N \left(x_H - x_N\right)^3 \\ 0 \\ k_N \left(x_N - x_H\right)^3 \end{bmatrix}$$

$$[\mathbf{F_{eq}}] = \begin{bmatrix} \frac{\omega^2 F_{\text{ref}} sin(\omega t)}{\omega_{\text{ref}}^2} \\ 0 \\ 0 \end{bmatrix}$$

$$[\mathbf{N_1}] = \begin{bmatrix} k_H \left(a1 \cos\left(\omega t\right) + b1 \sin\left(\omega t\right)\right)^3 \\ 0 \\ k_N \left(x_N - x_H\right)^3 \\ + k_N \left(a1 \cos\left(\omega t\right) + b1 \sin\left(\omega t\right) e1 \cos\left(\omega t\right) - f1 \sin\left(\omega t\right)\ \right)^3 \\ - \\ - \end{bmatrix}$$

REFERENCES

[1] Sampson, E., and Van Niekerk, J. L., 2003. "Literature survey on anti-vibration gloves".

[2] Mandal, B. B., and Srivastava, A. K., 2006. "Risk from vibration in indian mines". *Indian Journal of Occupational and Environmental Medicine,* ***10***(2), p. 53.

[3] Palmer, K. T., Griffin, M. J., Syddall, H., Pannett, B., Cooper, C., and Coggon, D., 2001. "Risk of hand-arm vibration syndrome according to occupation and sources of exposure to hand-transmitted vibration: A national survey". *American Journal of Industrial Medicine,* ***39***(4), pp. 389–396.

[4] Burdorf, A., Govaert, G., and Elders, L., 1991. "Postural load and back pain of workers in the manufacturing of prefabricated concrete elements". *Ergonomics,* ***34***(7), pp. 909–918.

[5] Carra, S., Monica, L., and Vignali, G., 2019. "Reduction of workers' hand-arm vibration exposure through optimal machine design: Ahp methodology applied to a case study". *Safety Science,* ***120***, pp. 706–727.

[6] Griffin, M. J., 2012. *Handbook of human vibration.* Academic press.

[7] Bernard, B. P., and Putz-Anderson, V., 1997. "Musculoskeletal disorders and workplace factors; a critical review of epidemiologic evidence for work-related musculoskeletal disorders of the neck, upper extremity, and low back".

[8] ISO, I., 2001. "5349-1: Mechanical vibration—measurement and evaluation of human exposure to hand-transmitted vibration—part 1: general requirements". *Geneva, Switzerland: International Organization for Standardization.*

[9] Vihlborg, P., Bryngelsson, L., Lindgren, B., Gunnarsson, L. G., and Graff, P., 2017. "Association between vibration exposure and hand-arm vibration symptoms in a swedish mechanical industry". *International Journal of Industrial Ergonomics,* ***62***, pp. 77–81.

[10] Griffin, M., Bovenzi, M., and Nelson, C., 2003. "Dose-response patterns for vibration-induced white finger". *Occupational and Environmental Medicine,* ***60***(1), pp. 16–26.

[11] Dong, R. G., Wu, J. Z., and Welcome, D. E., 2005. "Recent advances in biodynamics of human hand-arm system". *Industrial health,* ***43***(3), pp. 449–471.

[12] Barregard, L., Ehrenström, L., and Marcus, K., 2003. "Hand-arm vibration syndrome in swedish car mechanics". *Occupational and environmental medicine,* ***60***(4), pp. 287–294.

[13] Institute, A. N. S., 1986. *Guide for the Measurement and Evaluation of Human Exposure to Vibration Transmitted to the Hand.*

[14] Sokolov, I., Babitsky, V., and Halliwell, N., 2007.

"Hand-held percussion machines with low emission of hazardous vibration". *Journal of sound and vibration,* ***306***(1-2), pp. 59–73.

[15] Sam, B., and Kathirvel, K., 2009. "Development and evaluation of vibration isolators for reducing hand transmitted vibration of walking and riding type power tillers". *Biosystems engineering,* ***103***(4), pp. 427–437.

[16] Tewari, V., and Dewangan, K., 2009. "Effect of vibration isolators in reduction of work stress during field operation of hand tractor". *Biosystems Engineering,* ***103***(2), pp. 146–158.

[17] Josefsson, M., and Grétarsson, S. L., 2015. "Optimisation of a non-linear tuned vibration absorber in a hand-held impact machine". Master's thesis.

[18] Golysheva, E., Babitsky, V., and Veprik, A., 2004. "Vibration protection for an operator of a hand-held percussion machine". *Journal of Sound and Vibration,* ***274***(1-2), pp. 351–367.

[19] Welcome, D. E., Dong, R. G., Xu, X. S., Warren, C., and McDowell, T. W., 2014. "The effects of vibration-reducing gloves on finger vibration". *International journal of industrial ergonomics,* ***44***(1), pp. 45–59.

[20] Hamouda, K., Rakheja, S., Dewangan, K., and Marcotte, P., 2018. "Fingers' vibration transmission and grip strength preservation performance of vibration reducing gloves". *Applied ergonomics,* ***66***, pp. 121–138.

[21] Wang, M., 2011. "Feasibility study of nonlinear tuned mass damper for machining chatter suppression". *Journal of Sound and Vibration,* ***330***(9), pp. 1917–1930.

[22] Lindell, H., Berbyuk, V., JOSEFSSON, M., and Grétarsson, S. L., 2015. "Nonlinear dynamic absorber to reduce vibration in hand-held impact machines". In In Proc. of the International Conference on Engineering Vibration, Ljubljana, 7-10 September;[editors Miha Boltežar, Janko Slavič, Marian Wiercigroch].-EBook.-Ljubljana: Faculty for Mechanical Engineering, 2015, pp. 1530–1539.

[23] Babitsky, V., 1998. "Hand-held percussion machine as discrete non-linear converter". *Journal of Sound and Vibration,* ***214***(1), pp. 165–182.

[24] Habib, G., Detroux, T., Viguié, R., and Kerschen, G., 2015. "Nonlinear generalization of den hartog s equal-peak method". *Mechanical Systems and Signal Processing,* ***52***, pp. 17–28.

[25] Ikago, K., Saito, K., and Inoue, N., 2012. "Seismic control of single-degree-of-freedom structure using tuned viscous mass damper". *Earthquake Engineering & Structural Dynamics,* ***41***(3), pp. 453–474.

[26] Jiang, J. Z., Matamoros-Sanchez, A. Z., Goodall, R. M., and Smith, M. C., 2012. "Passive suspensions incorporating inerters for railway vehicles". *Vehicle System Dynamics,* ***50***(sup1), pp. 263–276.

[27] Wang, F.-C., Liao, M.-K., Liao, B.-H., Su, W.-J., and Chan, H.-A., 2009. "The performance improvements of train suspension systems with mechanical networks employing inerters". *Vehicle System Dynamics,* ***47***(7), pp. 805–830.

[28] Giaralis, A., and Taflanidis, A., 2018. "Optimal tuned mass-damper-inerter (tmdi) design for seismically excited mdof structures with model uncertainties based on reliability criteria". *Structural Control and Health Monitoring,* ***25***(2), p. e2082.

[29] Hu, Y., Chen, M. Z., and Shu, Z., 2014. "Passive vehicle suspensions employing inerters with multiple performance requirements". *Journal of Sound and Vibration,* ***333***(8), pp. 2212–2225.

[30] Joubaneh, E. F., and Barry, O. R., 2019. "On the improvement of vibration mitigation and energy harvesting using electromagnetic vibration absorber-inerter: Exact h2 optimization". *Journal of Vibration and Acoustics,* ***141***(6).

[31] Dong, R. G., Welcome, D. E., Wu, J. Z., and McDowell, T. W., 2008. "Development of hand-arm system models for vibrating tool analysis and test rig construction". *Noise Control Engineering Journal,* ***56***(1), pp. 35–44.

[32] Asami, T., Nishihara, O., and Baz, A. M., 2002. "Analytical solutions to h and h 2 optimization of dynamic vibration absorbers attached to damped linear systems". *J. Vib. Acoust.,* ***124***(2), pp. 284–295.

[33] Grappasonni, C., Habib, G., Detroux, T., Wang, F., Kerschen, G., and Jensen, J. S., 2014. "Practical design of a nonlinear tuned vibration absorber". In Proceedings of the ISMA 2014 conference.

[34] Marian, L., and Giaralis, A., 2017. "The tuned mass-damper-inerter for harmonic vibrations suppression, attached mass reduction, and energy harvesting". *Smart structures and systems,* ***19***(6), pp. 665–678.